Biosphere 2 Ocean: Optimization of Heat Exchange

Dr. Ildar Gabitov

MATH 485

Midterm Report

Attn: John Adams, Deputy Director, Biosphere 2, University of Arizona

"Envisioning science for reef solutions in the Biosphere 2 Ocean" by J. Cole, R. Gates, and workshop participants

Team: Lyra Troy, Sasha Sepulveda, Carl Solway

Background

The Biosphere 2 contains several housed ecosystems used in large-scale experimentation to better understand Earth's natural ecosystems. One of these vital ecosystems is the ocean habitat, known as the Biosphere 2 Ocean (B2O). Using the B2O, researchers at Biosphere 2 can study several important mechanisms that mimic Earth's oceans. One such research area involves coral, and how they thrive in different ocean conditions. The widespread death of corals has been closely tied to rising ocean temperatures, hence it is important for researchers to be able to control the temperature of the large-scale experimental ocean.

The B2O has a water volume of 676,000 gallons and heated/cooled water is let in through a single main pump at a flow rate of 380 GPM. Currently, the B2O setpoint temperature is 75°F ± 0.20°F. The temperature of the water entering the B2O is controlled by one titanium plate-and-frame heat exchanger (HX-1). This heat exchanger allows cooled or heated water to enter the B2O via one inlet in the corner, and the water is mixed evenly with a mixer in the center; there is a temperature sensor near the well-mixed water. At the other end of the B2O, the water exits through one outlet to a pump, and is cycled back to the heat exchanger, HX-1. The schematic of this internal loop can be seen in Figure 1 below

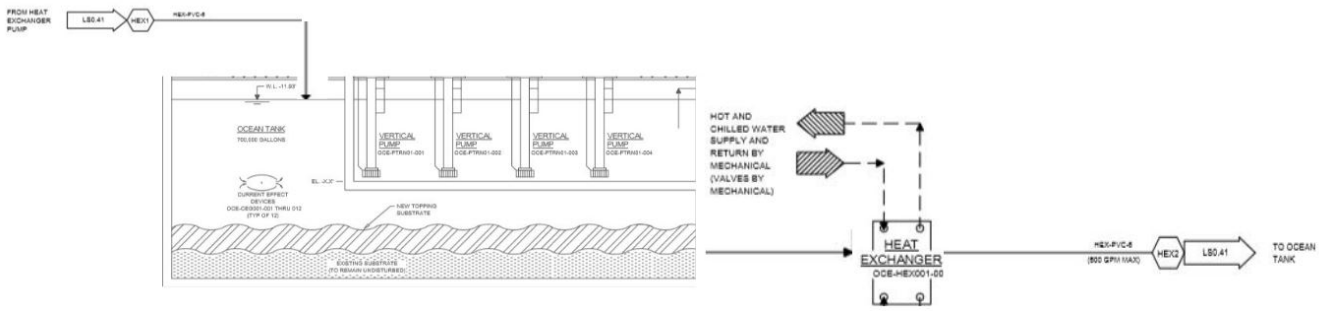

Figure 1: Schematic of B2O at Biosphere 2, provided by John Adams

The internal loop for the B2O water is not a closed system; if HX-1 needs more heating/cooling capability, external water from the chiller or boiler at the energy center can be sent to HX-1 to assist in controlling the setpoint temperature. The heat exchanger contains inlets for heated and chilled water controlled by mechanical valves. The schematic of HX-1 can be seen in Figure 2.

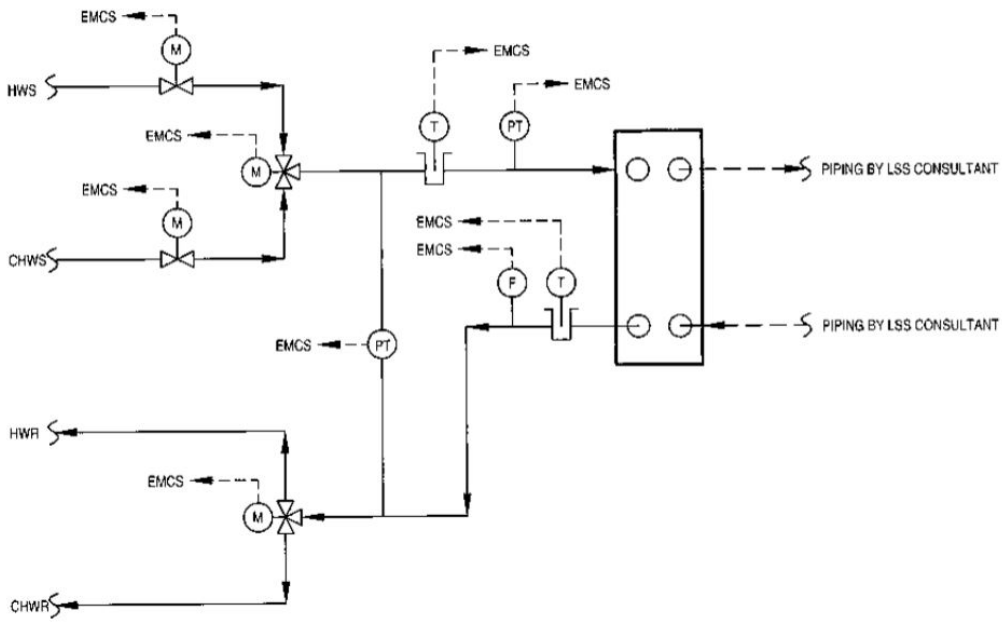

Figure 2: Ocean Heat Exchanger (HX-1) Schematic provided by John Adams

As seen in Figures 1 and 2, there are several possibilities of how the heat exchanger can loop its water to keep the B2O at the setpoint temperature.

Problem Statement

The amount of energy used by the heat exchanger and the external chiller and boiler in order to heat or cool water for the B2O to stay at a setpoint temperature is very large. Thus, the cost is high for Biosphere 2 to maintain the power demand of B2O. While the researchers are very interested in studying the coral, little attention is given to the high cost to continuously heat and cool the B2O.

As mentioned, there are several possibilities of how the heat exchanger HX-1 can keep the B2O at the setpoint temperature.

Currently, operators in the energy center have a “feel” for the temperature data, and when they observe a certain rise or drop in the B2O setpoint temperature, they mechanically open or shut the valves from the chiller or boiler entering HX-1 based off experience. The valves that can be manually shut or open correspond to the valves with “M” next to them in Figure 2. The operators also manually open or close the return valve for water to loop back to the chiller or boiler.

While there is a vague schedule and guidelines, there is no formal model in place dictating how much to open/shut the valve or when to open/shut the valve. In addition, there are different heating/cooling loop possibilities and there is currently no differentiation between which loop is more energetically conservative, or which loop may save more energy. A pre-heated internal loop for B2O may be more energetically effective than externally providing new heated/cooled water from the chiller/boiler for a specific day and time, and vice versa.

Our task is to optimize the energy consumption used by B2O in order to reduce cost while still maintaining the desired setpoint temperature.

Methods and Approach

The methods used to optimize the energy consumption involve deploying simple conservation of energy equations around the heat exchanger and the various loops. Once the energy demand of the heat exchanger and its respective loops are understood, the energy demand for various heating/cooling scenarios can be calculated using computational methods. Once the energy demand for various scenarios can be calculated, a relationship between the mechanically controlled valves and the temperature supply can be established for each scenario. The optimization lies within which scenario yields the lowest energy demand while maintaining the same setpoint temperature of B2O.

The goal is to then provide the operators at Biosphere 2 with a decision table in which, depending on the temperature of B2O, and time of year, the appropriate heating/cooling loop will be given along with the values of positions of the valves.

This method was chosen because sufficient data is given for the heat exchanger and B2O such as temperature, flow rate, heating/cooling capacity, steady state conditions, schematics, geometric dimensions, and process flow diagrams, and because the laws of thermodynamics are well-understood in a simple balance. With large amounts of data, less explicit calculations are completed and instead, trends and patterns will take place between data sets that will assist in the optimization.

The energy carried by the supply water to HX-1 is one of several important numbers that will be explicitly calculated. If the energy of the incoming water to HX-1 is known, then other factors affecting this can be explored, such as which heating/cooling loop to use as well as what temperature of water is needed from the boiler or chiller to provide such energy coming into HX-1.

This energy, or heating demand, can be found by applying a simple energy balance on HX-1. The schematic of this energy balance can be seen in Figure 3 (This is the same heat exchanger as the one shown in Figure 2).

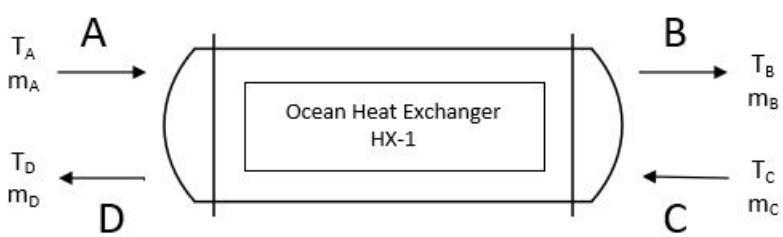

Figure 3: Schematic of HX-1.

A is the HX-1 Supply, **B** is the B2O supply, **C** is the B2O return, and **D** is the HX-1 Return. T_i corresponds to the temperature of each stream, and m_i corresponds to the flowrate of each stream.

The transfer of heat between the separated water in the heat exchanger follows the second law of thermodynamics in which energy from one heated stream of water is transferred to the cooler stream of water. This relationship is captured by the Heat transfer rate, Equation 1.

$$Q = UA\Delta T_m \quad \textit{(Eqn. 1)}$$

Where Q is the heat transfer rate, U is the overall heat transfer coefficient, A is the effective heat transfer area, and ΔT_m is the mean temperature difference.

Since energy is conserved, it is known that the energy entering the system must be equal to the energy leaving the system.

$$Q_{in}=Q_{out} \quad \textit{(Eqn. 2)}$$

Expanding around HX-1, Eqn. 2 becomes

$$Q_A+Q_C=Q_B+Q_D$$

Since we are interested in the energy of the HX-1 supply, Q_A is isolated.

$$Q_A= Q_B+Q_D-Q_C \quad \textit{(Eqn. 3)}$$

For a heat exchanger, it is known that Eqn. 1 becomes

$$Q_i=m_iC_{pi}(T_i-T_R) \quad \textit{(Eqn. 4)}$$

Where m_i is the mass flowrate, C_{pi} is the specific heat of the liquid, and T_i, T_R are temperatures.

Combining Eqn. 3 and Eqn. 4,

$$Q_A=m_BC_p(T_B-T_R)+ m_DC_p(T_D-T_R)- m_CC_p(T_C-T_R) \quad \textit{(Eqn. 5)}$$

Since the water is the only liquid transferring heat in HX-1, the specific heat C_p is constant and can be factored out.

$$Q_A=C_p[m_B(T_B-T_R)+ m_D(T_D-T_R)- m_C(T_C-T_R)] \quad \textit{(Eqn. 6)}$$

Equation 6 models the energy of the HX-1 supply temperature and depends on the temperatures of the other streams as well as their mass flowrates.

Since the volume of B2O is constant and the rate at which water entering B2O equals the rate at which water exits B2O, $m_B= m_C$:

$$Q_A=C_p[m_B(T_B-T_C)+ m_D(T_D-T_R)]$$

By assuming that HX-1 has a constant volume of water in it at all times, this also forces $m_A = m_D$,.and in addition to using Eqn. 4 again, we have:

$$m_A C_p(T_A - T_R) = C_p[m_B(T_B - T_C) + m_A(T_D - T_R)]$$

Rearranging,

$$T_A = \frac{m_B}{m_A}(T_B - T_C) + T_D \text{ (Eqn. 7)}$$

Since each parameter depends on time, it is appropriate to represent Eqn. 7 in vector form.

$$\vec{T}_A = \frac{\vec{m}_B}{\vec{m}_A}\left(\vec{T}_B - \vec{T}_C\right) + \vec{T}_D \text{ (Eqn. 8)}$$

With Excel data provided by the Biosphere 2 SCADA data center, the variables T_B , T_D, T_C, m_B, m_D, and m_C are all known. These variables depend on time, and the data for each variable was collected every 15 minutes from September 27th, 2019 to March 6th, 2020. The data comes from the temperature sensors and flowrate sensors included in Figure 2.

The large amount of data collected can be implemented into Eqn. 8 as vectors and using Excel and MATLAB, $\overrightarrow{T_A}$ can be determined for any given point of time in the data set.

Once $\overrightarrow{T_A}$ is calculated and understood, we can use Eqn. 1 again to yield

$$\overrightarrow{Q_A} = \vec{m}_A C_p\left(\overrightarrow{T_A} - \vec{T}_{i,S}\right) \text{ (Eqn. 9)}$$

Where $\vec{T}_{i,S}$ is either hot water supply temperature, or chilled water supply temperature coming from the boiler/chiller, which is external in the HX-1 loop.

By creating a vector $\vec{T}_{i,S}$ in MATLAB to represent the different possibilities of temperatures coming from the boiler/chiller, $\overrightarrow{Q_A}$ can be determined, which is the heating load carried by the HX-1 supply water. Thus, each supply temperature vector entering the loop will yield a different heat demand vector necessary to keep B2O at its setpoint temperature.

The optimized scenario is to have a certain supply temperature vector, $\vec{T}_{i,S}$, that yields the lowest heat demand, $\overrightarrow{Q_A}$, while maintaining the setpoint of B2O. Ideally, if heating the B2O is desired, the approach is to is minimize the temperature of each element in $\vec{T}_{i,S}$, which corresponds to a lower heating duty used to heat water in the boiler, which will require less energy and reduce the overall cost spent on the boiler heating demand. If cooling the B2O is desired, the opposite will hold; maximizing the temperature in $\vec{T}_{i,S}$ corresponds to a lower cooling duty used to chill the water in the chiller, which also reduces the overall cost spent on the chiller cooling demand.

Once the supply temperature relationship to the heating/cooling demand is optimized, the relationship between the mechanical valve opening and the supply temperature can be understood and a relationship between the B2O setpoint temperature and the valve-opening will be established and optimized.

Results

Since the data set is very large in that measurements were recorded every 15 minutes between September 27th, 2019 to March 6th, 2020, a small portion of data was first used to understand and optimize the ocean heat exchange problem for a one-month timeline.

The timeframe for which data was initially used was selected for January 1st, 2020 to February 1st, 2020, narrowing down the analysis to a one-month window. During this window, the B2O needed to be heated during the winter, hence the boiler was being used.

$\overrightarrow{T_A}$ was calculated using Eqn. 8 with Excel, and the actual $\overrightarrow{T_A}$ measurement given by the Biosphere 2 SCADA data center was compared to it. The graph comparing this data can be seen in Figure 4 below.

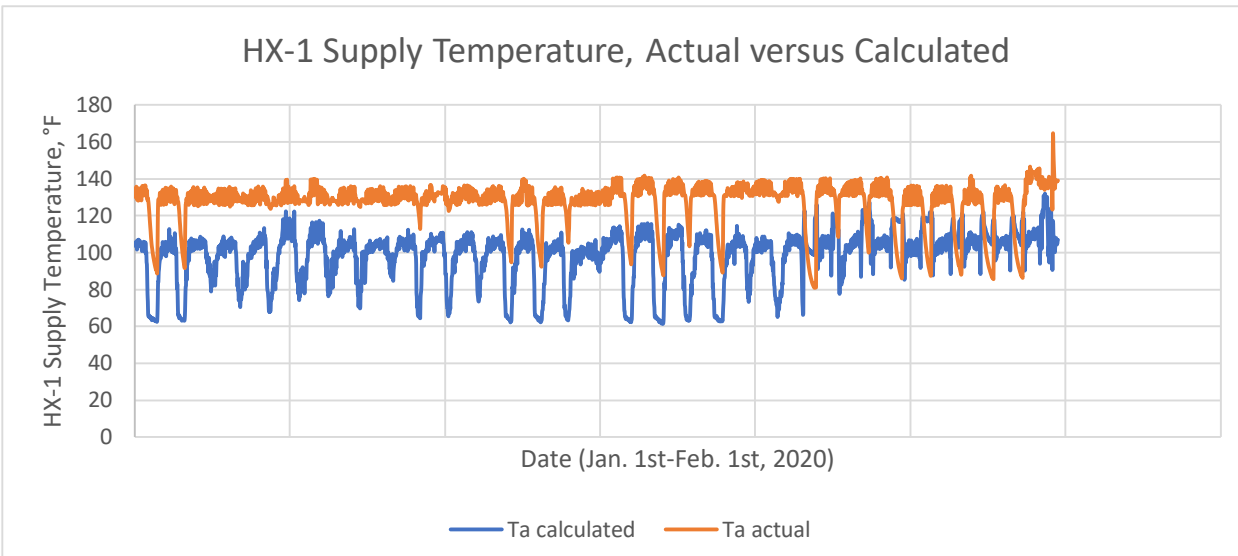

Figure 4: HX-1 Supply Temperature, calculated and measured

Essentially, the calculated and measured HX-1 supply water temperature followed the same shape but has large differences at the minima. Where a calculated water supply temperature was higher, the actual temperature of the water entering the heat exchanger drops off in almost symmetric peaks at almost the same time daily.

This indicates that as the day goes on, the temperature of the environment in Tucson increases, possibly offsetting the need for more heated water. If the temperature outside is warmer, the temperature of the water in the Biosphere 2 facility will likely be warmer as well.

In the calculated HX-1 supply temperature, assumptions were made under a closed system, in which the time of day and ambient conditions were not considered. Additionally, issues such as pump failures, shutdowns, and other external factors were not considered when calculating the HX-1 supply water temperature.

While these minima are more dramatic in real time, the similar trend demonstrates the reliability and accuracy of computing the needed HX-1 supply water temperature. Using this same calculation from Eqn. 8 to predict future needed supply water temperatures can be successful once more corrective factors are added. As the relationship is better understood, an optimization can be reached.

Using all-measured values, the heating demand, Q_{boiler}, was also calculated for the timeframe between January 1st-February 1st, 2020. The HX-1 supply and return temperature was assumed to enter entirely through the return loop and not looped through the internal HX-1 loop (open-loop). The provided flow rate used was the HX-1 return flowrate from SCADA. Figure 5 below illustrates the heating demand of the boiler over time in order to keep B2O at its setpoint temperature.

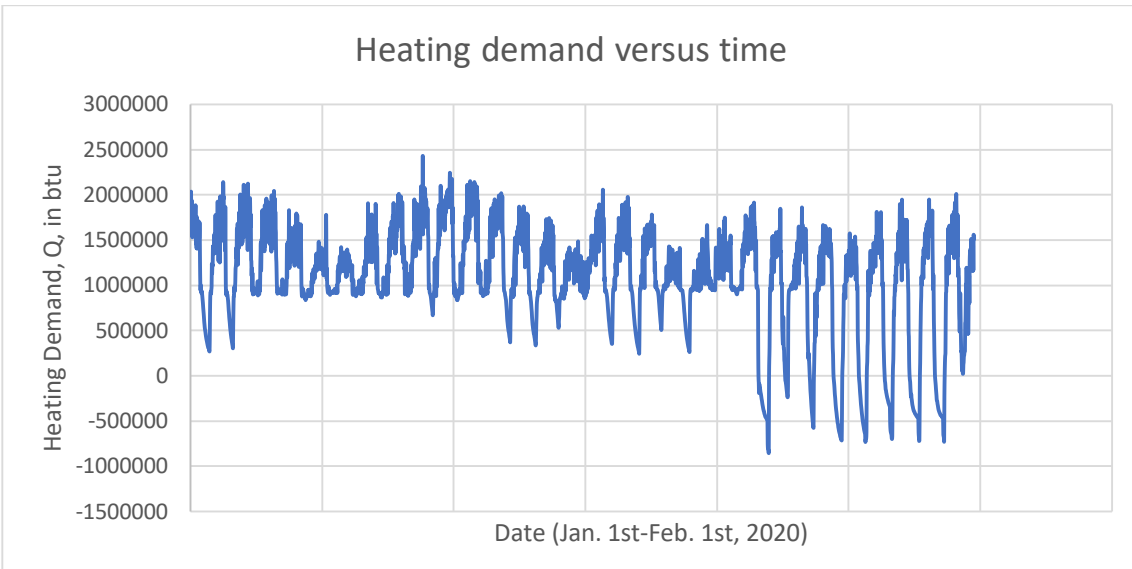

Figure 5: Calculated heating demand of the boiler in an open-loop

The heating demand is oscillatory, and as predicted before, falls off during the middle of the day, and rises during the night. As time progresses towards the end of the month, the heating demand for the boiler becomes negative in its minima during the night, which indicates that during this time, heating duty is not necessary, but rather chilling is necessary. When the heating demand is negative, the water supply temperature needs to be cooler, or, heat needs to be taken out of the water loop.

The average heating duty is 72,720 btu/min with this open-loop configuration to keep the B2O at its setpoint temperature. This is expected to decrease as the possibility of internal-loop configurations are considered. This average is used as a maximum value rather than an optimization. However, this is pertinent in understanding the relationship between the HX-1 supply temperature and the heating duty.

Conclusions

Overall, the calculations performed match the measured data from the Biosphere 2 SCADA data center. While there is some error in the magnitude of the minima, the calculated model is close to being a scalar value away from matching the measured data. With a scalar corrective factor, the model can be used to optimize future scenarios of supply water temperature at different times of the year.

What has been accomplished so far includes analyzing advanced Piping and Instrumentation Diagrams (P&ID), making sense of an enormous data sets for dozens of Excel files, organizing large amounts of sensor data, understanding the mechanisms by which B2O is heated/cooled, and familiarizing with each schematic provided by Biosphere 2. In each schematic, there multiple codes, valves, pumps, dimensions, piping, and streams. The pathways of the boiler/chiller to the heat exchanger to the B2O and back was difficult to decipher as well.

The thermodynamic laws that a heat exchanger follows was also not immediately intuitive, and research on the simple modeling of a heat exchanger was accomplished. Knowing which variables were provided and what variable to look for was not obvious but were understood over time.

The most difficult task was understanding the schematics; mapping physical locations to a specific Excel file was the greatest accomplishment. Using logic of heat transfer and tedious iterations, each Excel file was mapped to a specific sensor or water line.

Finding an approach to the problem also took a large amount of time; uncertainties of where to draw an energy balance around and over-ambition delayed the analysis. At first, the goal was to analyze all the data at once for all scenarios. Once the problem was broken down into simpler steps with a realistic goal, analysis became possible and a successful analysis of data was performed for a one-month time frame.

What is expected in the future includes analyzing the rest of the data from September 2019 to March 2020 and including the possibility for opening or closing the internal heat exchanger loop. For the rest of the semester, time and attention will be diverted to analyzing the rest of the data, finding a correction factor for the simple scenarios (such as the one from January to February), and relating these to the supply valves. The supply valves are manually opened and closer by the operators, who have a “feel” for the data and know when to open them depending on certain conditions.

At the end of the semester, the plan is to a have an optimal relationship between the supply valves, the heating load, and the B2O setpoint temperature.

Future goals

After the relationship between $\overrightarrow{Q_A}$, the mechanical supply valves, and the B2O setpoint temperature is understood, different heating/cooling loop scenarios can be fully explored. By deploying a similar energy balance around the boundary of the HX-1 external loop, where the HX-1 return valve is either open or closed, a new set of possibilities arise. A new set of vectors containing each looping-temperature possibility can be deployed with the pre-existing models. As mentioned before, a pre-heated/pre-cooled internal loop for HX-1 may be more energetically effective than externally providing new heated/cooled water from the chiller/boiler for a specific day and time, and vice versa. An optimization of all scenarios an only be successfully competed if all scenarios are taken into account.

Another strong future goal to consider is to understand and optimize these possibilities for the varying time of year; in the summer, large cooling demands may reach extremes, and during cold winters, large heating demands may also reach extremes. This is due to atmosphere heat exchange with the B2O and other streams of water, and due to radiation from the sun. Correlating the time of year to the B2O setpoint temperature will become a future essential relationship for a complete Biosphere 2 ocean heat exchange optimization.

Future Goals: Machine Learning

Machine learning relies on algorithms and statistical probabilities learned from known data (training data) to infer future outcomes or system states. A future goal involves using a machine learning approach would be to develop a simulation model that could be continually trained with data to optimize output. For this method, the algorithm used would follow a model free, actor-critic method (Fig 2). This reinforced learning method is used for decision making under uncertain conditions, i.e. stochastic policies. At each time step, the agent takes an action and receives a state observation and scalar reward signal from the environment, which is unknown.

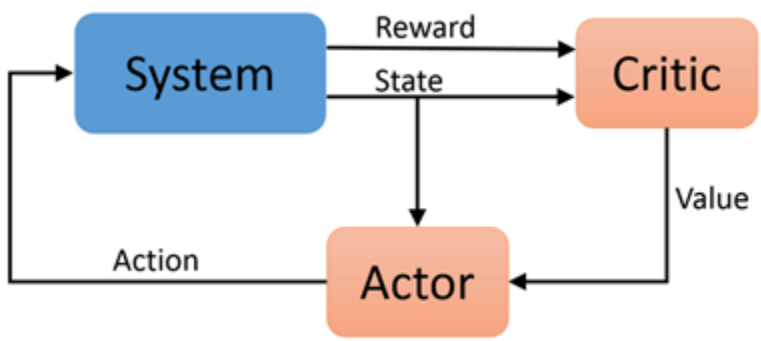

Figure 6: Actor-Critic Reinforced Learning System.

The RL algorithm aims to maximize the agent's total accumulated reward over time, given a previously unknown environment through a trial-and-error learning process. The agent does this by "learning" an optimal policy that maximizes an expected sum of rewards. This sum is given by the following equation:

$$G_t = r_{t+1} + \gamma r_{t+2} + \gamma^2 r_{t+3} + \ldots = \sum_{k=0}^{\infty} \gamma^k r_{t+k+1}$$

Where 0< γ <1 is a discounting term used to affect the value of future rewards (e.g. the smaller γ is, the less future rewards matter).

This expected rewards sum can then be used in other equations, for example the state value function. The state value function estimates the total returns (reward sum G_t), starting from some state 's', following policy π (1). An extension of this is the action value function, which takes into account actions taken in addition to the policy followed.

The reinforce policy used by Wang et al, which we will also be adapting for use in this project, is the policy gradient method. Using the following equation,

$$\nabla_\theta J(\theta) = E_\pi \left[\sum_{t=0}^{T-1} \nabla_\theta \, log\pi(a_t|s_t,\theta) \left(\sum_{t\prime=t}^{T-1} r_{t\prime} - b_{s(t)} \right) \right]$$

We can estimate the gradient of the policy with respect to J(θ), using some baseline $b_{s(t)}$. This baseline is arbitrary and is picked for the purpose of reducing variance in the gradient estimate. In the paper written by Wang et al, they replace $b_{s(t)}$ with $v^\pi(s_t)$, where $v^\pi(s_t)$ is a state value function that acts as a critic, hence the critic in "actor critic method". These equations will be put to use in a reinforced machine learning algorithm whose purpose will be to optimize the system for energy usage given several weeks or months off previous B2O data.

For a future goal of this project, the input data will be information about the environment surrounding B20 (time of day/year), energy usage, and heat exchanger temperature, and the output will be the corresponding series of actions that can be taken at any time to raise or lower the temperature flowing into the B2O.

References*

1. Wang, Y.; Velswamy, K.; Huang, B. A Long-Short Term Memory Recurrent Neural Network *Based Reinforcement Learning Controller for Office Heating Ventilation and Air Conditioning Systems*. Processes 2017, 5, 46.
2. Singh, Satinder, et al. “Advances in Neural Information Processing Systems 12.” MIT Press, *Policy Gradient Methods for Reinforcement Learning with Function Approximation*, 2000, pp. 1057–1063.
3. Yang, K. (July 9, 2008). "Artificial Neural Networks (ANNs): A New Paradigm for Thermal Science and Engineering." ASME. *J. Heat Transfer*. September 2008; 130(9): 093001.https://doi.org/10.1115 /1.2944238
4. University of Arizona Biosphere 2 Ocean Renovation – Heat Exchanger Package. Mechanical Controls, Sequence of Operations and Points List. Sheet Number MI001. M3PN 180158.502. Provided by John Adams at Biosphere 2.
5. Biosphere 2 Ocean Tank Renovation. Ocean Tank Renovation – Piping and Instrumentation Diagram. Sheets LSO.41, LSO.45. Provided by John Adams at Biosphere 2.
6. The University Of Arizona Biosphere 2 Landscape Evolution Observatory. Project Number 11-9057. June 30, 2011. Provided by John Adams at Biosphere 2.
7. Biosphere 2 Energy Center Diagram. Provided by John Adams at Biosphere 2.
8. https://biosphere2.org/content/biosphere2-scada-data. Provided by John Adams at Biosphere 2.
9. Energy Center Points List[1], .xlsx file. Provided by John Adams at Biosphere 2.
10. Biome Point List[1], .xls file. Provided by John Adams at Biosphere 2.

*All references will be included in the final report